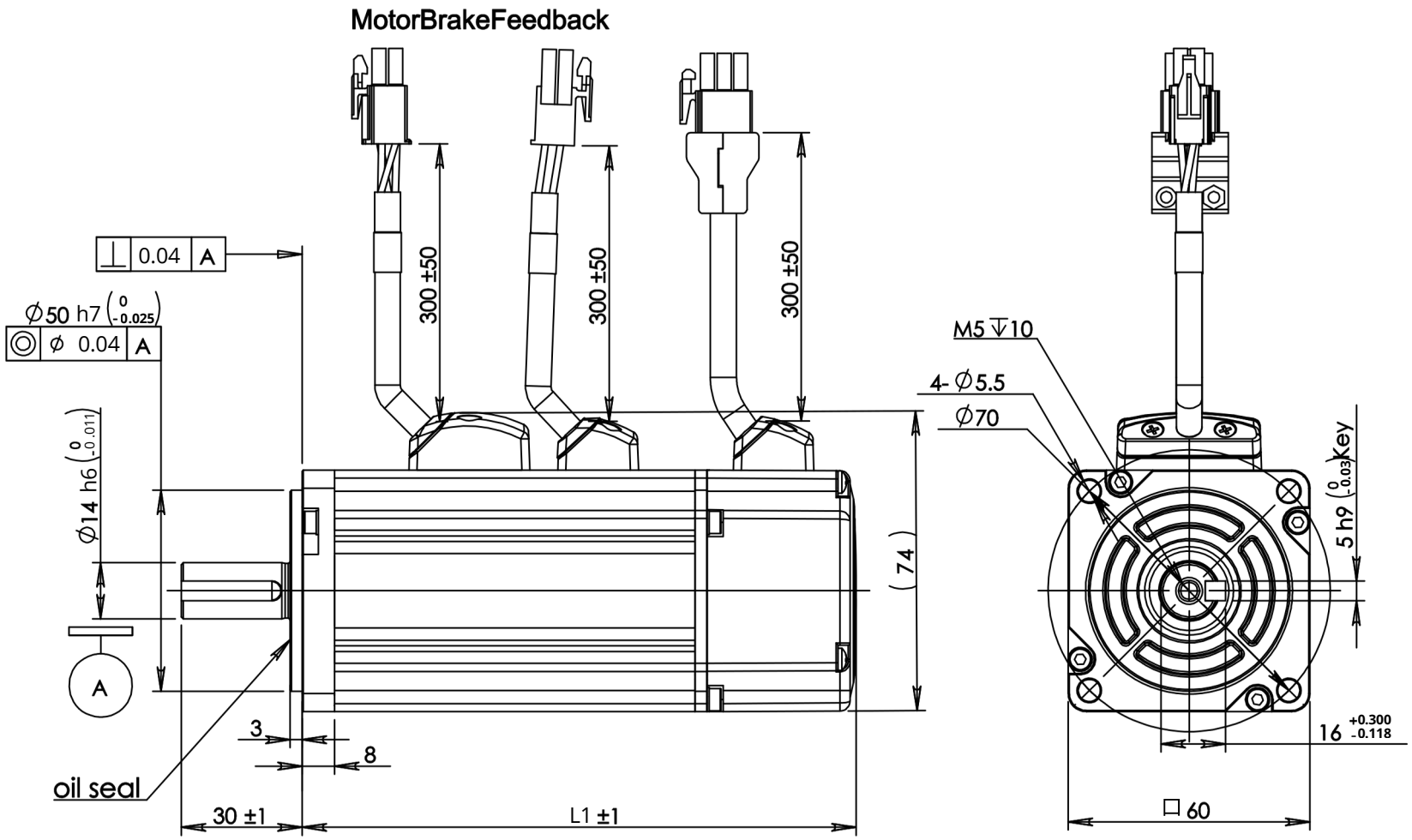

L1 (mm)	
SM0601□E4-KCF-BNV	145
SM0602□E4-KCF-BNV	165

A0	Mark	Quantity	Revision No.		Date
Design				Process	
Audit				Check	
				Approve	

200W SM0601□E4-KCF-BNV
400W SM0602□E4-KCF-BNV

Drawing stage	Weight	Scale
Sheet 1 of 1		